Molded connector, form B, industrial type

SAP TIM

Molded sheathing

Color	anthracite (translucent)
Material	TPU
Imprint	circuit diagram; white; on front side

Terminal block

Material	PA6 GF15
Poles	2 + PE
Direction of protecting earth	12 h
Contact distance	11 mm

Cable

Jacket	PVC, black
Internal cores	yellow/green, blue, brown
Cores x cross-section	3 x 0,75 mm²
⑤ Outer diameter	ca. 6,7 mm
Length (L)	5,00 m
Stripping (A)	30,0 mm
Core ends	equipped with wire end sleeves
Temperature range (fix)	-30 ... +80°C
Temperature range (flexible)	-5 ... +70°C

Contacts

Material	CuZn, coated with Cu/Sn
Forward resistances	< 15 mOhm

Gasket

Type	TPU, molded

Fastening screw

Material	A2-50 (stainless steel)
Size	M3 x 26,0 mm
Recess type	cross recess (type H) with longitudinal slot
Tightening torque	0,4 ± 0,1 Nm

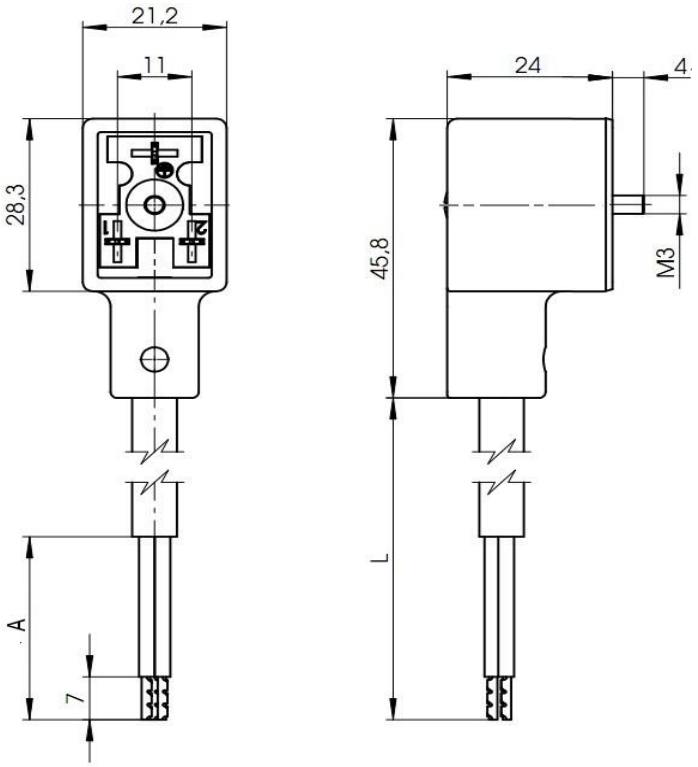

Circuit

Built-in electronics	LED + varistor
LED	red
Protecting element	yes, varistor
Voltage range	230 V ± 15 %
Current type	AC/DC
Operating current	max. 1,50 A (Derating is to be considered.)
Protection against wrong polarity	yes

Imprint

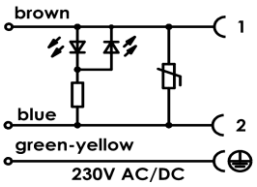

General properties

Temperature range *	-25 ... +90°C
RoHS	yes
Protection grade (IEC 60529) **	IP67

Packaging

Single packaging. The molded connector is single packed in the plastic bag and inserted into the cardboard box. Fastening screw is inserted into the plastic bag.Product informations are displayed on the label of the plastic bag.
Kunststoffbeutel Größe ist 200X300mm.

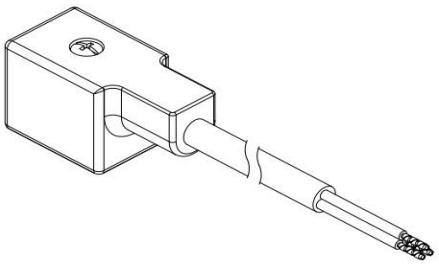

* Depends on the connected cable.

** Must be tested in properly mounted state on the counterpart.

Ind Rev	Änderung-Nr. Change no.	Datum Date	Name By
5	31323	21.03.2022	TTO
4	28399	22.03.2018	GJO
3	26609	08.02.2016	PKR
2	26600	01.02.2016	PKR
1	26443	27.10.2015	PKR

Zulässige Abweichung für Maße ohne Toleranzangabe
Unless otherwise specified tolerances
DIN ISO 2768-v

Schutzvermerk ISO 16016 beachten
Observe protection note ISO 16016

Geprüft: Checked: 21.03.2022 JONAS

Erstellt: Created: 19.09.2012 KROZSER

nass magnet

Format/Size: A4 | Maßstab/Scale: | Gewicht/Weight: 360 g/pcs

Werkstoff: Material:

Benennung: Title:

Molded con I2+E12h PVC3x0,75 5,00m 03Er

Ident. - Nr.: 612-202-0175 | Freigabe-Nr.: Approval no.: 24277 | Blatt: Sheet: 1/1

Ersatz für/Replacement for:

Technical changes reserved.