Molded connector, form B, industrial type

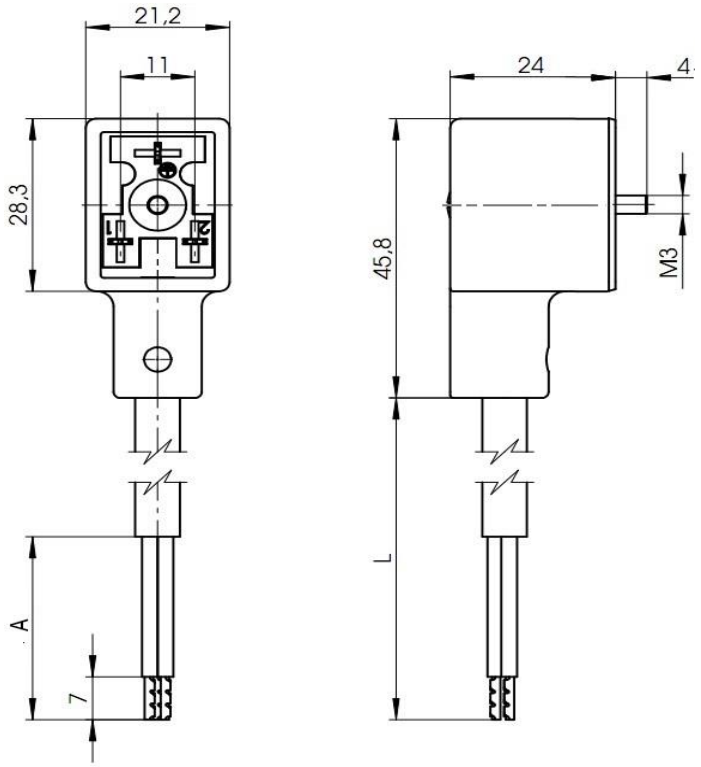

Molded sheathing

Color	anthracite (translucent)
Material	TPU
Imprint	circuit diagram; white; on front side

Terminal block

Material	PA6 GF15
Poles	2 + PE
Direction of protecting earth	12 h
Contact distance	11 mm

Cable

Jacket	PVC, black
Internal cores	yellow/green, blue, brown
Cores x cross-section	3 x 0,75 mm²
④ Outer diameter	ca. 6,7 mm
Length (L)	5,00 m
Stripping (A)	30,0 mm
Core ends	equipped with wire end sleeves
Temperature range (fix)	-30 ... +80°C
Temperature range (flexible)	-5 ... +70°C

SAP TIM

Contacts

Material	CuZn, coated with Cu/Sn
Forward resistances	< 15 mOhm

Gasket

Type	TPU, molded

Fastening screw

Material	A2-50 (stainless steel)
Size	M3 x 26,0 mm
Recess type	cross recess (type H) with longitudinal slot
Tightening torque	0,4 ± 0,1 Nm

Circuit

Built-in electronics	LED + varistor
LED	red
Protecting element	yes, varistor
Voltage range	12 V - 24 V
Current type	AC/DC
Operating current	max. 1,50 A (Derating is to be considered.)
Protection against wrong polarity	yes

Imprint

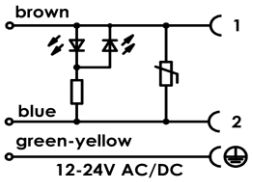

General properties

Temperature range *	-25 ... +90°C
RoHS	yes
Protection grade (IEC 60529) **	IP67

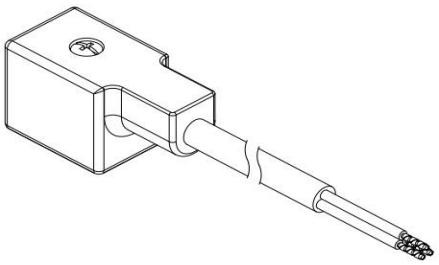

Packaging

30 pcs packaging.
1x30 pcs. fastening screw in plastic bags.
Size of the cardboard box: 380x260x260 mm.
packaging weight: ca. 10,8 kg

* Depends on the connected cable.
** Must be tested in properly mounted state on the counterpart.

Ind Rev	Änderung-Nr. Change no.	Datum Date	Name By
4	31323	21.03.2022	TTO
3	28399	22.03.2018	GJO
2	26609	08.02.2016	PKR
1	26443	27.10.2015	PKR

Zulässige Abweichung für Maße ohne Toleranzangabe
Unless otherwise specified tolerances
DIN ISO 2768-v

Schutzvermerk ISO 16016 beachten
Observe protection note ISO 16016

Format/Size: A4 | Maßstab/Scale: | Gewicht/Weight: 360 g/pcs

Werkstoff:
Material:

Benennung:
Title:

Molded con I2+E12h PVC3x0,75 5,00m 03Fr

Geprüft: Checked: 21.03.2022 JONAS

Erstellt: Created: 06.03.2015 KROZSER

nass magnet

Ident. - Nr.: 612-202-0238 | Freigabe-Nr.: Approval no.: 25984 | Blatt: Sheet: 1/1

Ersatz für/Replacement for:

Technical changes reserved.